7th Annual International IEEE EMBS Conference on Neural Engineering
Montpellier, France, 22 - 24 April, 2015

# *How many people can control a motor imagery based BCI using common spatial patterns?*

Rupert Ortner*, Josef Scharinger, Alexander Lechner and Christoph Guger

*Abstract*— **EEG based Brain-Computer Interfaces (BCIs) often use evoked potentials (P300), steady state visual evoked potentials (SSVEP) or motor imagery (MI) for control strategies. This study investigated maximum and mean accuracy of a MI based BCI using Common Spatial Patterns (CSP). Twenty healthy people participated in the study and were equipped with 64 active EEG electrodes. They performed a training paradigm with 160 trials by imagining either left or right hand movement to set up a subject specific CSP filter to spatially filter the EEG data. Following that, two real-time runs with 80 trials were performed, which provided feedback to the subject. The real-time accuracy was then calculated for every subject, and finally a grand average accuracy of 80.7% was reached for the 20 subjects. One person reached a perfect classification result of 100%, 30% performed above 90% and one was below 59%. The results show that most people can use a MI based BCI after a brief training time if CSPs with 64 active electrodes are used. The method of CSP yields clearly better classification results compared to a bandpower approach. While more electrodes are needed for classification, this is less of a disadvantage with modern active electrodes.**

## I. Introduction

A Brain-Computer Interface (BCI) offers a communication channel between the brain and an external device. BCIs have been developed for decades (e.g. [1], [2], [3]), and many different applications for BCIs have been introduced. There are three major noninvasive BCI approaches. The choice of approach depends partly on the application. For example, for a BCI as communication tool, or if a large number of different discrete classes should be controlled, a P300 speller is the most popular approach [4]. The steady-state visual evoked potentials (SSVEP) paradigm can be used to control robotic [5], orthotic [6] or prosthetic devices [7]. Both of these mental strategies require low training time, and the number of people able to control the device is very high [8], [9]. The third major BCI approach is based on event related desynchronization/synchronization (ERD/ERS) and uses motor imagery (MI). In comparison to P300 and SSVEP, the MI approach normally requires more training and has lower accuracy but is well suited e.g. for rehabilitation purposes [10], [11].

Both the P300 and SSVEP require an external stimulus and are therefore called synchronous BCIs. In contrast, motor imagery (MI)-based BCIs do not need an external stimulation source and can be controlled asynchronously (see e.g. [12]), often use external stimuli for trial instructions and feedback.

R. Ortner, A. Lecher and C. Guger are with g.tec Guger Technologies OG, Sierningstraße 14, 4521 Schiedlberg, Austria (phone: 004372512224016; e-mail: ortner@ gtec.at).

J. Scharinger is with Department of Computational Perception, Johannes Kepler University Linz, 4040 Linz, Austria.

The ERD is related to power changes in mu and central beta components during movement execution or MI [13]. Most MI-based BCIs discriminate between two different classes (e.g. [14], [15], [16]), but there are also approaches using three [12] or four classes [17].

The method of common spatial patterns (CSP) is a powerful signal processing technique that was shown to superiorly extract discriminative information, compared to other spatial filters like bipolar, Laplacian or common average reference [18], [19]. For proper work the CSP needs though a high number of electrodes [23]. Different modifications of the method have been implemented during the last years. Ang and colleagues proposed to use a Filter Bank CSP algorithm yielding higher cross-validation accuracies compared to prevailing approaches [21]. Sannelli et al. used ensembles of spatial filters to reduce the needed training time for each user [22].

The accuracy of 99 users controlling a two-class MI-based BCI was evaluated in 2003, which showed that 93% of the subjects were able to achieve classification accuracy above 60% [15]. The data acquisition for this study was done during a public exhibition, allowing the group to test their BCI on a huge number of users. But the preparation and execution of each session had to be quick and as easy as possible, so a minimal setup with two bipolar EEG channels over the sensorimotor region was chosen. For classification, a linear discriminant analysis (LDA) approach with either an adaptive autoregressive (AAR) model or band power (BP) estimation was used. That study extended work that introduced the first 100% real-time accuracy study using 27 EEG electrodes and CSP [18].

The current study investigated how many people could control a motor imagery based BCI with CSP using 64 channels. In addition to using more channels and improved signal processing, the present study improves on prior work by using active electrodes, which require far less preparation time.

## II. Materials and Methods

The method of CSP yields a set of spatial filters that are designed to minimize the variance of one class while maximizing it for the other class. Given N channels of EEG for each left and right trial, the CSP method provides an N x N projection matrix. This matrix is a set of subject-dependent spatial patterns, which reflect the specific activation of cortical areas during hand movement imagination. With the projection matrix W, the decomposition of a trial X is described by

$$Z = WX \tag{1}$$

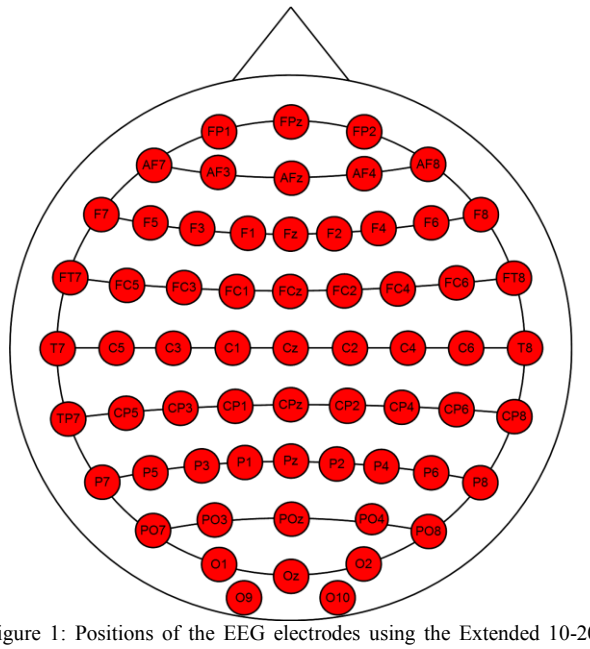


Figure 1: Positions of the EEG electrodes using the Extended 10-20 system. The ground electrode was placed on the forehead (near FPz) and the reference on the right earlobe.

This transformation projects the variance of X onto the rows of Z and results in N new time series. The columns of $W^{-1}$ are a set of CSPs and can be considered as time-invariant EEG source distributions. Due to the definition of W, the variance for a left hand movement imagination is largest in the first row of Z and decreases in each subsequent row. The opposite occurs for a trial with right hand motor imagery. To classify the left and right trials, the variances have to be extracted as reliable features of the newly designed N time series. However, it is not necessary to calculate the variances of all N time series. The method provides a dimensionality reduction of the EEG. Mueller-Gerking et al. [16] showed that the optimal number of CSPs is four. Based on their results, after building the projection matrix W from an artifact corrected training set $X_T$, only the first and last two rows (p=4) of W are used to process new input data X. Then the variance ($VAR_p$) of the resulting four time series is calculated for a time window T. These values are normalized and log transformed according to the formula:

$$f_p = \log_{10}\left(\frac{VAR_p}{\sum_{P=1}^{4} VAR_p}\right) \qquad (2)$$

Where $f_p$ (p=1.4) are the normalized feature vectors and $VAR_p$ is the variance of the p-th spatially filtered signal. These four features can be classified with a linear discriminant analysis (LDA) classifier.

The data were recorded from 64 positions (see Figure 1) distributed over the cortex and sampled at 256 Hz. Active EEG electrodes (g.LADYbird) were used to increase data quality. For data recording, a g.HIamp biosignal amplifier (g.tec medical engineering GmbH, Austria) was used. Before applying the spatial filters, the EEG data were bandpass filtered between 8Hz and 30Hz. This broad range approach was chosen because Müller-Gerking proved that it yields better discrimination results in comparison to narrow

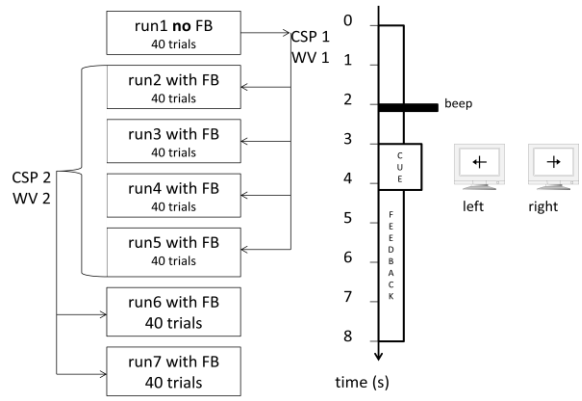


Figure 2: Workflow of one session and timing of a single trial. Left: After the first run, a set of spatial filters (CSP1) and a classifier was calculated that was used to give feedback during the following 4 runs. The next set of spatial filters and weight vectors (CSP2, WV2) was then used for run 6 and 7. Right: Timing within one trial. A fixation cross appears when the trial begins A short beep cues the user after two seconds. One second later, a visual cue is presented. From 4.25 seconds until the end of the trial (8s), online feedback is presented.

bands [16]. Then, the variance was calculated within a time-window of 1.5s. These features were normalized and log transformed and classified with LDA. Finally, the LDA classification result drove the visualized feedback to the user.

20 healthy users (mean age 23.5 years, 5 female, 15 male) participated in the study. Users were recruited from the Johannes Kepler University Linz and the University of Applied Sciences Upper Austria, none of whom had used that BCI before. All of them performed one session, lasting about 90 minutes. Each session consisted of seven runs as depicted on the left side of Figure 2. Each run included 20 trials for left-hand movement and 20 trials for right-hand movement in a randomized order. Feedback was not presented during the first run (run1). The data from this run was used to compute a first set of spatial filters (CSP1) and a classifier (WV1). Data were first visually inspected, and trials with artifacts were removed. With this initial set of spatial patterns and classifier, another four runs (run2, run3, run4, run5) were performed while providing online feedback to each user. The merged data from these four runs (run2345) were used to set up a second set of spatial filters (CSP2) and a classifier (WV2) that used more trials and was thus more accurate. Finally, to test the resulting online accuracy during the feedback sessions, two more runs (run 6, run 7; merged data: run67) were conducted.

One trial lasted eight seconds. Between each trial, a random intertrial interval between 0.5 seconds and 1.5 seconds was included. The timing of one trial is shown in the right side of Figure 2. At the beginning (0 seconds), a fixation cross appears on the screen to mark the trial onset. Two seconds later, a short beep is presented to get the user's attention. Three seconds after trial onset, an arrow pointing either to the left side or the right side of the screen is presented, which remains until 4.25 seconds. This arrow cues the subject to begin left or right hand MI. In the feedback runs, a blue bar starts in the middle of the screen and extends either to the left or the right side of the screen, adapting in real-time. This blue bar informs the user whether the detected MI reflected left or right imagery, and reflects

TABLE I. ACCURACY ACROSS TWENTY USERS. THE MAX ACCURACY IS THE MAXIMUM AVERAGED ACCURACY THE USER ACHIEVED WITHIN ONE SAMPLE. FOR MEAN ACCURACY, THE SINGLE SAMPLES ARE AVERAGED FROM FIVE TO EIGHT SECONDS.

| Subject ID | Max accuracy in % | Mean accuracy in % | Subject ID | Max accuracy in % | Mean accuracy in % |
|---|---|---|---|---|---|
| ***S1*** | 66.2 | 57.7 | ***S11*** | 76.2 | 67.9 |
| ***S2*** | 100 | 94.5 | ***S12*** | 82.5 | 66.2 |
| ***S3*** | 80.0 | 64.5 | ***S13*** | 98.7 | 93.2 |
| ***S4*** | 57.5 | 51.8 | ***S14*** | 88.6 | 79.5 |
| ***S5*** | 62.5 | 54.3 | ***S15*** | 70.0 | 60.0 |
| ***S6*** | 62.5 | 52.3 | ***S16*** | 97.5 | 88.4 |
| ***S7*** | 68.7 | 56.8 | ***S17*** | 98.7 | 92.9 |
| ***S8*** | 97.5 | 94.8 | ***S18*** | 80.0 | 70.5 |
| ***S9*** | 88.7 | 83.0 | ***S19*** | 71.2 | 65.9 |
| ***S10*** | 98.7 | 96.1 | ***S20*** | 68.7 | 57.4 |
| | | | ***Mean*** | 80.7 | 72.4 |
| | | | ***STD*** | 14.4 | 16.2 |

the strength of the imagery. Feedback continues from 4.25 seconds until the end of the trial (8 seconds).

Accuracy rate was calculated based on the presented cue and the classified movement. The accuracy for each session was calculated by applying CSP2 and WV2 onto the merged dataset run67. Since CSP2 and WV2 were calculated only with data from run2345, the calculation of accuracy was done with independent data. The classifier was applied for every single sample of all 80 trials across the two runs. If the detected MI fitted the given cue, this sample was counted as correct; otherwise, it was counted as incorrect. The average accuracy over all trials for every sample could then be calculated. With the number of tested trials (n = 80), a confidence of 1-α = 0.95 and an expected chance level of $\hat{p}$ = 0.5, we estimated the limits wherein the accuracy level does not significantly differ from a random one [20]:

$$\hat{p} \pm \sqrt{\frac{\hat{p}(1-\hat{p})}{n}}\, z_{1-\frac{\alpha}{2}} \qquad (3)$$

Where $z_{1-\frac{\alpha}{2}}$ is the $1-\frac{\alpha}{2}$ quantile of the standard normal distribution. This results in a lower limit of about 39.1% and an upper limit of about 60.7%. Accuracy levels above the upper limit were assumed to be better than random.

## III. RESULTS

Table 1 shows the results of all the twenty subjects that participated in the study. All accuracy rates were computed by applying the CSP2 and WV2 from run2345 to the data from run67. The average maximum accuracy rate reached during the eight seconds of each trial for all subjects is 80.7%. The mean accuracy rate during the feedback period between seconds 5-8 of the trials is 72.4%

TABLE II. CLASSIFICATION ACCURACIES FROM THE CURRENT CSP STUDY AND THE MI STUDY WITH TWO BIPOLAR CHANNELS USING AAR AND BP ESTIMATION.

| Classification accuracy in % | Number of sessions CSP (N=20) | Percentage of sessions in range - CSP (N=20) | Percentage of sessions in range - AAR + BP (N = 93) |
|---|---|---|---|
| 100 | 1 | 5 | 0 |
| 90-99 | 5 | 25 | 6.2 |
| 80-89 | 5 | 25 | 13 |
| 70-79 | 3 | 15 | 32.1 |
| 60-69 | 5 | 25 | 42 |
| 50-59 | 1 | 5 | 6.7 |
| Sum | 20 | 100 | 100 |

Table 2 summarizes the classification results of the current CSP study compared to the bipolar motor imagery study using AAR and BP estimation [15]. The table shows how many people achieved a certain accuracy range, and also shows the percentage of people within each accuracy range. For the CSP study, one person achieved a perfect accuracy of 100%, with 19 persons above the confidence limit of a chance result (60.7%), and only one person below it. For the AAR + BP study nobody reached perfect accuracy, but more than 90% were above 60%. However, in that study, only 19.2% of subjects were above 80%, compared to 55% in the present study.

## IV. DISCUSSION

The study showed that a high percentage of people can control a MI based BCI system with CSPs and 64 EEG electrodes. Only one person did not achieve accuracy above the confidence limit within the 60 minutes training time. The average maximum and mean accuracies were 80.7% and 72.4%. CSP clearly outperformed the earlier AAR + BP implementation. Importantly, the CSP accuracies were calculated in real-time. They are therefore independent from the training data, and are not cross-validated as in the AAR + BP study.

The CSP method clearly needs more electrodes than others. CSPs can suppress noise by using the data from many electrodes, and hence need a minimum number of electrodes to perform well. Ramoser also used a 64 channel montage and showed that performance declines below 18 electrodes [23]. CSPs require electrodes over the complete sensorimotor cortex to capture the important information. The AAR + BP study tried to minimize the number of channels, and therefore used an effective approach with two bipolar channels overlaying the right hand and feet motor regions. This bipolar derivation was equal for every subject; it was not subject-specific. The CSP filter calculates an individual filter for each person that weights each electrode according to its importance.

The 64 electrodes were distributed over the entire cortex. Because the ERD is generated over the motor cortex, moving frontal and occipital positions to medial positions (in between some positions of the extended 10-20 system) could improve accuracy rates.

In both MI studies, the population that could not control the BCI was comparably very low (5% for CSP; 6.7% for AAR + BP). Further subjects would be needed to explore this issue with CSP. This percentage of users may not generate any classifiable ERD, no matter what method is used. Some groups use the term "BCI illiteracy" for people who are not able to reach sufficient control [24]. However, the threshold for effective control depends on many factors, including the application. For example an accuracy level below 70% or even 80% could be insufficient for cursor control. For other purposes, including motor rehabilitation, any accuracy above chance level could be helpful.

Studies often present only the maximum accuracy. We also calculated the mean accuracy rate to explore whether users were able to generate the desired EEG activity throughout the feedback period of each trial. The mean accuracy is an important indicator for rehabilitation BCIs with continuous feedback (and other applications), because performance and feedback should be accurate throughout each trial or activity, not only at one optimal time. In fact, some users needed more time after the cue to generate the ERD. Others improved accuracy more quickly after trial onset, but could not produce a stable pattern throughout the trial. Some good performers maintained almost constant performance throughout the trial. Thus, as with SSVEP BCIs that provide continuous feedback, different users exhibit different patterns of changes in relevant EEG activity during trials [9], [25].

## V. Conclusion

Despite minimal training, MI-based BCI systems with 64 channels and spatial filtering with CSPs perform very well for most subjects. Relative to prior studies assessing performance across many users, the present study used active electrodes, which entail less time and inconvenience. A grand average maximum accuracy of 80.7% after only 60 minutes of training time opens many new investigation areas for this type of BCI system.

## References


[1] D. J. McFarland, G. W. Neat, R. F. Read and J. R. Wolpaw, "An EEG-based method for graded cursor control," *Psychobiol.,* vol. 21, pp. 77-81, 1993.

[2] G. Pfurtscheller, D. Flotzinger and J. Kalcher, "Brain-Computer Interface a new communication device for handicapped persons," *Journal of Microcomputer Applications,* vol. 16, no. 3, pp. 293-299, 1993.

[3] G. Pfurtscheller and A. Berghold, "Patterns of cortical activation during planning of voluntary movement," *Electroencephalography and Clinical Neurophysiology,* vol. 72, no. 3, pp. 250-258, 1989.

[4] J. R. Wolpaw, N. Birbaumer, D. J. McFarland, G. Pfurtscheller and T. M. Vaughan, "Brain-computer interfaces for communication and control," *Clinical Neurophysiology,* vol. 113, pp. 767-791, 2002.

[5] R. Ortner, C. Guger, R. Prueckl, E. Grünbacher and G. Edlinger, "SSVEP Based Brain-Computer Interface for Robot Control," in *Computers Helping People with Special Needs*, vol. 6180, K. Miesenberger, J. Klaus, W. Zagler and A. Karshmer, Eds., Springer Berlin Heidelberg, 2010, pp. 85-90.

[6] R. Ortner, B. Z. Allison, G. Korisek, H. Gaggl and G. Pfurtscheller, "An SSVEP BCI to Control a Hand Orthosis for Persons With Tetraplegia," *IEEE Trans. Neural Syst. Rehabil. Eng.,* vol. 19(1), pp. 1-5, 2011.

[7] P. Horki, T. Solis-Escalante, C. Neuper and G. Müller-Putz, "Combined motor imagery and SSVEP based BCI control of a 2 DoF artificial upper limb," *Med Biol Eng Comput.,* vol. 49(5), pp. 567-577, 2011.

[8] C. Guger, S. Daban, E. Sellers, C. Holzner, G. Krausz, R. Carabalona, F. Gramatica and G. Edlinger, "How many people are able to control a P300-based brain-computer interface (BCI)?," *Neuroscience Letters,* vol. 462, pp. 94-98, 2009.

[9] C. Guger, B. Z. Allison, B. Grosswindhager, R. Prueckl, C. Hintermueller, C. Kapeller, M. Bruckner, G. Krausz and G. Edlinger, "How many people could use an SSVEP BCI?," *Frontiers in Neuroscience,* vol. 6 2012.

[10] K. K. Ang, C. Guan, K. S. Phua, C. Wang, L. Zhou, K. Y. Tang, G. J. E. Joseph, C. W. K. Kuah, and K. S. G. Chua, "Brain-Computer Interface-based robotic end effector system for wrist and hand rehabilitation: results of a three-armed randomized controlled trial for chronic stroke," *Frontiers in Neuroengineering*, 2014.

[11] M. Gomez-Rodriguez, M. Grosse-Wentrup, J. Hill, A. Gharabaghi, B. Schölkopf and J. Peters, "Towards Brain-Robot Interfaces in Stroke Rehabilitation," in *2011 IEEE International Conference on Rehabilitation Robotics*, 2011.

[12] R. Scherer, G. R. Müller, C. Neuper, B. Graimann and G. Pfurtscheller, "An asynchronously controlled EEG-based virtual keyboard: improvement of the spelling rate," *IEEE Trans. Neural Syst. Rehabil. Eng.,* vol. 51, pp. 979-984, 2004.

[13] G. Pfurtscheller and A. Aranibar, "Evaluation of event-related desynchronization (ERD) preceding and following voluntary self-paced movements," *Electroencephalography and Clinical Neurophysiology,* vol. 46, pp. 138-146, 1979.

[14] G. Pfurtscheller, C. Guger, G. Müller, G. Krausz and C. Neuper, "Brain oscillations control hand orthosis in a tetraplegic," *Neuroscience Letters,* vol. 292, pp. 211-214, 2000.

[15] C. Guger, G. Edlinger, W. Harkam, I. Niedermayer and G. Pfurtscheller, "How many people are able to operate an EEG-based brain-computer interface (BCI)?," *IEEE Trans. Neural Syst. Rehabil. Eng.,* vol. 11, pp. 145-147, 2003.

[16] J. Müller-Gerking, G. Pfurtscheller and H. Flyvbjerg, "Designing optimal spatial filters for single-trial EEG classification in a movement task," *Clinical Neurophysiology,* vol. 110, pp. 787-798, 1999.

[17] G. Townsend, B. Graimann and G. Pfurtscheller, "A comparison of common spatial patterns with complex band power features in a four-class BCI experiment," *IEEE Trans. Biomed. Eng.,* vol. 53, pp. 642-651, 2006.

[18] C. Guger, H. Ramoser and G. Pfurtscheller, "Real-Time EEG Analysis with Subject-Specific Spatial Patterns for a Brain–Computer Interface (BCI)," *IEEE Trans. Rehab. Eng.,* vol. 8, pp. 447-456, 2000.

[19] B. Blankertz, R. Tomioka, S. Lemm, M. Kawanabe and K.-R. Müller, "Optimizing Spatial Filters for Robust EEG Single-Trial Analysis," *IEEE Signal Processing Magazine,* vol. 25(1), pp. 41-56, 2008.

[20] G. R. Müller-Putz, R. Scherer, C. Brunner, R. Leeb, and G. Pfurtscheller, "Better than random? A closer look on BCI results," International Journal of Bioelectromagnetism, vol. 10, no. 1, pp. 52–55, 2008.

[21] K. K. Ang, Z. Y. Chin, H. Zhang, and C. Guan, "Filter bank common spatial pattern (FBCSP) in brain-computer interface," in Neural Networks, 2008. IJCNN 2008.(IEEE World Congress on Computational Intelligence). IEEE International Joint Conference on, 2008, pp. 2390–2397.

[22] C. Sannelli, C. Vidaurre, K.-R. Müller, and B. Blankertz, "Common Spatial Pattern Patches: online evaluation on BCI-naive users," in 34th Annual International Conference of the IEEE EMBS San Diego, California USA, 2012.

[23] H. Ramoser, J. Müller-Gerking, and G. Pfurtscheller, "Optimal spatial filtering of single trial EEG during imagined hand movement," *IEEE Trans. Rehabil. Eng.*, vol. 8, pp. 441–446, 2000.

[24] B. Allison and C. Neuper, "Could Anyone Use a BCI?," in *Brain-Computer Interfaces*, D. S. Tan and A. Nijholt, Eds., Springer London, 2010, pp. 35-54.

[25] C. Guger, R. Prückl, B.Z. Allison, C. Hintermüller, B. Großwindhager, C. Kapeller, and G. Edlinger, "Poor performance in SSVEP BCIs: Are worse subjects just slower?" *34th Annual International IEEE EMBS Conference of the IEEE Engineering in Medicine and Biology Society,* 3833 – 3836, 2012