*The 5th IEEE International Conference on E-Health and Bioengineering - EHB 2015*
*Grigore T. Popa University of Medicine and Pharmacy, Iaşi, Romania, November 19-21, 2015*

# Controlling a Hand Orthosis by Means of P300-Based Brain Computer Interface

Andrei Stan[1], Danut Constantin Irimia[2], Nicolae Alexandru Botezatu[1], Robert Gabriel Lupu[1]
*Affiliation 1:* Computer Department, "Gh. Asachi" Technical University of Iasi, Iasi, Romania, andreis@cs.tuiasi.ro
*Affiliation 2:* EUEDIA Department, "Gh. Asachi" Technical University of Iasi, Iasi, Romania

***Abstract* — This paper aims to present a BCI based rehabilitation system and communication tool for stroke survivors. The system uses P300 evoked potential in order to control a hand orthosis or to write text. The key element is the real-time feature extraction and classification that works fast enough to present a feedback to the patient on the computer display. That helps the patient to learn faster to control the BCI system. The integration of a wireless control mechanism for the orthosis subsystem yields an easier setup phase and ensures a certain degree of freedom for the patient.**

***Keywords—BC, orthosi; P300; stroke; rehabilitation.***

## I. INTRODUCTION

Despite the fact that worldwide, each year, around 15 million people suffer a stroke [1], this medical condition often has a lower priority for researchers and medical services than other disease with at least the same or even lower impact on public health [2]. In terms of statistic numbers, the impact of stroke on public health, according to World Health Organization, is that from 15 million people that suffer a stroke every year, only 5 million successfully recover, 5 million die and 5 million are permanently disabled [3]. That makes stroke the second and fifth leading cause of death for above and, respectively, under age of 60 years. For those who survived it is very important to start the rehabilitation process in order to relearn the lost skills. This is possible due to neuroplasticity, a brain property to create new connections between neurons [4]. Repetitive training, intensity and relevance of the rehabilitation exercises can produce only modest improvement for lower limb but nothing for the upper limb control [5]. That can be changed just by using a mirror with significant results on upper limb control [6], [7]. Despite the improvements that it brings the mirror therapy has some disadvantage like limited exercises, low patient motivation and no challenging task [8]. Using video games, virtual reality VR and augmented reality AR the disadvantage mentioned above can be overcome [9], [10] but only 80% of lower limb functionality and 20% of upper limb functionality is recovered [11]. These percentages can be improved with a robotic device but the costs involved are too high compared with obtained recovery results. However, recent studies demonstrate that using a robotic device in combination with AR/VR, and any of the following brain computer interface BCI, electromyography EMG, functional electric stimulation leads to motor imagery development and shows promising results in clinical trials [12], [13]. According to Schlatter and co. [14], "motor imagery based rehabilitation is proven to be an effective therapy".

A Brain-Computer Interface (BCI) is a device which provides a direct communication pathway between the brain and a computer. In the last decade, the BCI research field focused primarily on neuroprosthesis control applications, aiming to restore damaged hearing, sight and movement [15].

The BCI devices can be controlled in different ways, depending on the desired application. As an example, when using a BCI as a communication tool, the P300 evoked potential is the most effective strategy due to the fact that more than 80% of the users are able to spell words with an accuracy between 80% to 100% after only a couple of minutes of training [16]. Other mental strategies are slow cortical potentials, steady-state visual evoked potentials and motor imagery.

Usually, for the BCI experiments, the subject is connected via electrodes or sensors to a biosignal amplifier and a data acquisition unit containing the analog-to-digital convertor. After, the data is passed to the real-time system to perform the feature-extraction and the classification. One of the most important things is that the real-time system works fast enough to present the feedback to the subject via a stimulation unit (the computer monitor). The feedback represents the BCI output and allows the subject to learn the BCI control faster. A machine learning BCI system operates in two phases: the calibration and the feedback phase. The feedback phase is the time the users can actually transfer information through their brain activity and control applications; in this phase, the system is composed of the classifier that classifies between different mental states and the user interface that translates the classifier output into control signals. In the calibration phase, examples of EEG signals are collected in order to train the classifier [17], [18].

978-1-4673-7545-0/15/$31.00 ©2015 IEEE

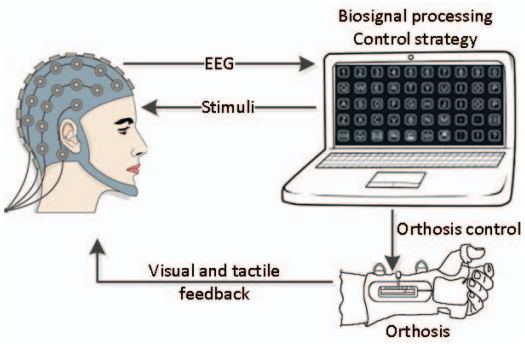


Fig. 1. Overview of the BCI-controlled orthosis system.

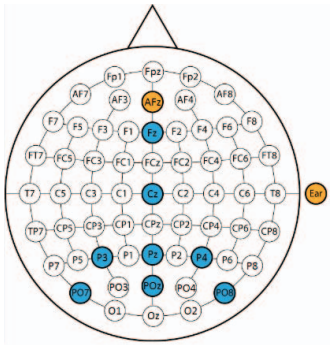

Fig. 2. Electrode disposal based on 10-20 International System

## II. MATERIAL AND METHODS

Fig. 1 presents an overview of the proposed system. The laptop performs the signal processing, controls the paradigm and displays the result to the user. According to the classification result, the laptop controls also the orthosis movements which represent at the same time a visual and a tactile feedback.

### *A. Data processing*

Eight active electrodes (g.LADYbird, g.tec medical engineering GmbH (g.tec), Austria) are used to record the EEG data overlying the visual cortex areas. The electrode displacement is done based on the 10-20 International System as presented in Fig. 2. The ground electrode is placed on the forehead and all electrodes must be referenced to the right ear. A multichannel EEG-amplifier is used (g.Nautilus, g.tec) to record data with a sampling frequency of 250 Hz.

Fig. 3 presents the MATLAB/Simulink online model used for character spelling. The sampled data is bandpass-filtered between 0.1 to 30 Hz and downsampled before being processed. When the Signal Processing block receives an input on the ID-Flash port, it begins to fill a first buffer with 800 ms EEG data. The ID-Flash indicates the time point when a letter flashes on the computer screen and is controlled by the Paradigm block (RowCol Character Speller). For every new flash, a new buffer item is generated and filled with EEG data. Each buffer stores the EEG data 100 ms before the ID-Flash occurs and 700 ms afterwards. The number of flashes of a letter for a single trial is set to 15. The Signal Processing block waits until each value of ID-Flash occurs 15 times, and then sends a STOP command to the Paradigm block which interrupts the paradigm. The Signal Processing block keeps on filling up the last buffer until the 800 ms EEG data are stored. After performing the signal processing, the classification is done using a Linear Discriminant Analysis (LDA) classifier which was previously calculated based on the data recorded during the calibration run. The LDA is a generalization of Fisher's linear discriminant, method used to find linear combinations or features that characterizes or separates two or more classes of objects or events. In this case, it uses single trial epochs of 800 ms to derive the LDA weighting coefficients. All time x location features are entered into the LDA. The LDA weights each input parameters according to its importance. The classification result, the sum of the weighted parameters, indicates the class (target or non-target stimuli) to which the character belongs. HHence, the LDA classifier selects the character having the highest sum of the weighted parameters and presents that character on the computer screen as feedback to the subject [16]. At the same time, the ID of the character is sent via output ID to the Orthosis control block which commands the orthosis to perform the movement assigned to that character.

### *B. Visual paradigm*

During the P300 experiments, the user has to sit one meter in front of the computer screen, to be relaxed, and to focus on the 6 x 6 letter matrix displayed on the monitor. Each of the letters in row and column respectively will flash for a certain time in a random and sequential order. The subject has to be instructed to look at a specific letter and silently count each time it flashes. The flash time of each letter is 100 ms and time between 2 consecutive flashes is set to 75 ms.

### *C. Orthosis hardware architecture*

The orthosis subsystem is made by two hardware devices: a Host Device (HD) and a Remote Device (RD). Both devices use the aceMote v1.0 platform [19] to provide the intended functionality, see Fig. 4.

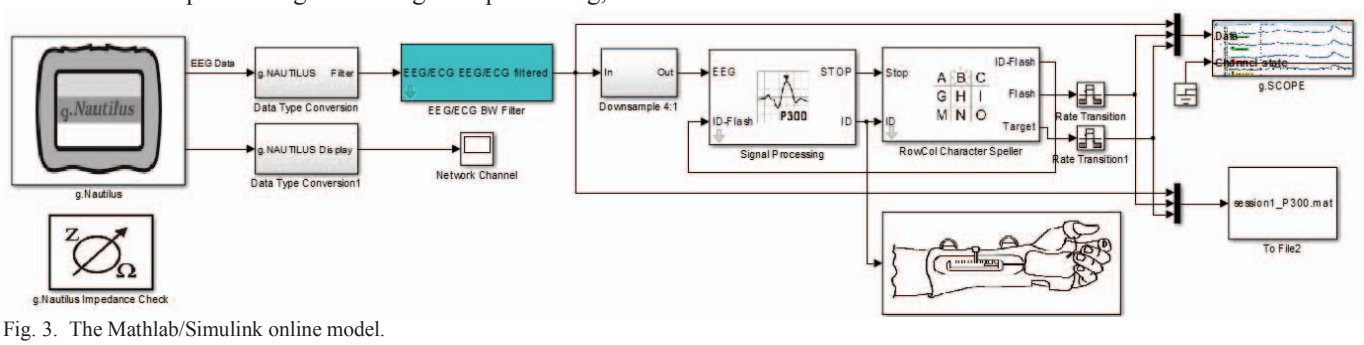


Fig. 3. The Mathlab/Simulink online model.

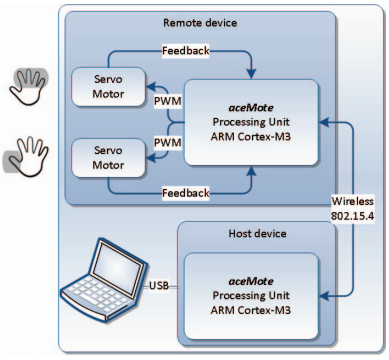


Fig. 4. Orthosis system.

The Host Device (HD) is a gateway device that directly connects to a PC system using a common USB interface; also, it uses an IEEE 802.15.4 wireless communication interface that allows a convenient connection to one or more Remote Devices without the burden of using lengthy cables; its main purpose is to receive commands from a PC application through the USB connection and then to transmit the commands further to the Remote Device through the wireless connection.

The Remote Device (RD) is composed of a control unit, two servo-motors and current feedback circuitry. The control unit uses an IEEE 802.15.4 interface to receive command messages from the HD and subsequently generates PWM signals to control the two motors. More, a circuit monitors the current consumption of the two motors and informs the control unit if a surge occurs.

The remote device has a horizontal fixture for the arm. This part of the system provides a comfortable fixture for the forearm of the patient.

The remote device has several servo-motors: one (or two) is used to flex four fingers; it actuates in the vertical plane (i.e., up-down) and one is used to flex thumb finger; it actuates in the horizontal plane (i.e., front-back).

Operational safety is an important topic that must be addressed when designing systems that interact directly (i.e., physically) with human subjects. These systems must be carefully designed in order to avoid any possible discomfort or injury of the human subject.

The employed hardware method to ensure safe operation is current monitoring of the motors. By using current monitoring the system can detect overload situations such as motor blocking which can arise when further finger movement is not possible.

Other hardware safety method is represented by the usage of switches to detect the end of allowed displacement that is safe for the human subject. These switches cut off the power line for the motors.

All the previously mentioned safety mechanisms are also connected to the software component of the system in order to alert proper personnel and to log erroneous behavior for later study and system enhancement.

The Remote Device has two integrated current monitors, one for each motor. One such circuit is composed of a high-side current monitor and a programmable gain amplifier (PGA). The analog signal from the second amplifier is sampled by the ADC peripheral (10 bit) of the aceMote and the gain is controlled by issuing commands via the SPI peripheral.

The orthosis subsystem has several operational parameters that can be configured on every use for every patient. As a patient takes part in a rehabilitation program, the mobility of its arm may improve, so the exercises that are used must also be customized to its mobility level. The following operational parameters can be adjusted in software: the movement amplitude, the movement speeds, the inactive time between repetitions, and the number of repetitions.

## III. Results and Discussion

The proposed system was tested on nine healthy persons who were free of medication and central nervous abnormalities. Before controlling the prosthesis, in the calibration phase, each user performed a training run with 5 characters for creating a LDA classifier and a second run for testing the classification accuracy. In the second run each user had to focus again to 5 preselected characters. The classification accuracy was calculated based on the correct classification of the preselected characters. All nine subjects achieved 100% accuracy during the classifier testing run after the 5th flash of each target letter (see Fig. 5). This means that the number of flashes for each letter can be decreased down to 6 or 7 flashes, leading to a shorter time for spelling a letter. Fig. 6 presents a comparison between the grand averages of the evoked potentials achieved during the target runs (solid dark green line) and those achieved during the non-target runs (solid blue line) for subject 9. A statistical significance analysis was done using the Mann-Whitney-U-test between the target and non-target trials. The time points where the differences are statistically significant are marked with green (highly positive significant, $p<0.01$), light green (positive significant, $p<0.05$), orange (highly negative significant, $p<0.01$) and yellow (negative significant, $p<0.05$). Except Fz position, which is located on the frontal part of the head, on all the other positions there are highly statistical significant differences between the target and non-target trials averages. These plots were achieved using g.BSanalyze biosignal analysis software provided by g.tec medical engineering GmbH.

After achieving 100% spelling accuracy in the second run of the calibration mode, the paradigm was switched to the orthosis control mode. Two different movements were assigned to the letters A and B and an orthosis enable/disable switch was assigned to letter E. So, before performing a movement, each user had to focus first on the letter E in order to enable the orthosis. After, when the user was focusing on the letter A, the hand opening was triggered. The orthosis kept the fingers extended until the “close” command assigned to letter B was received. When working with stroke patients, the user has to be instructed to try to perform the hand opening and closing together with the orthosis. It has been proven that the active involvement of the patient in the rehabilitation process can bring supplementary benefits to the rehabilitation outcome.

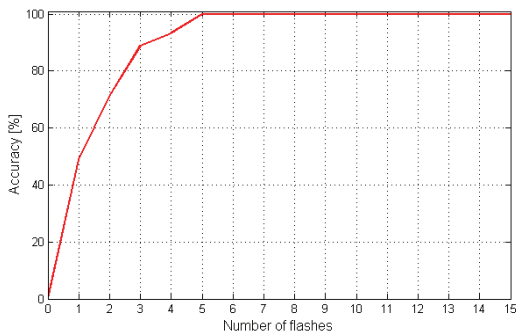


Fig. 5. The P300 based speller averaged accuracy achieved by the 9 subjects in the calibration run.

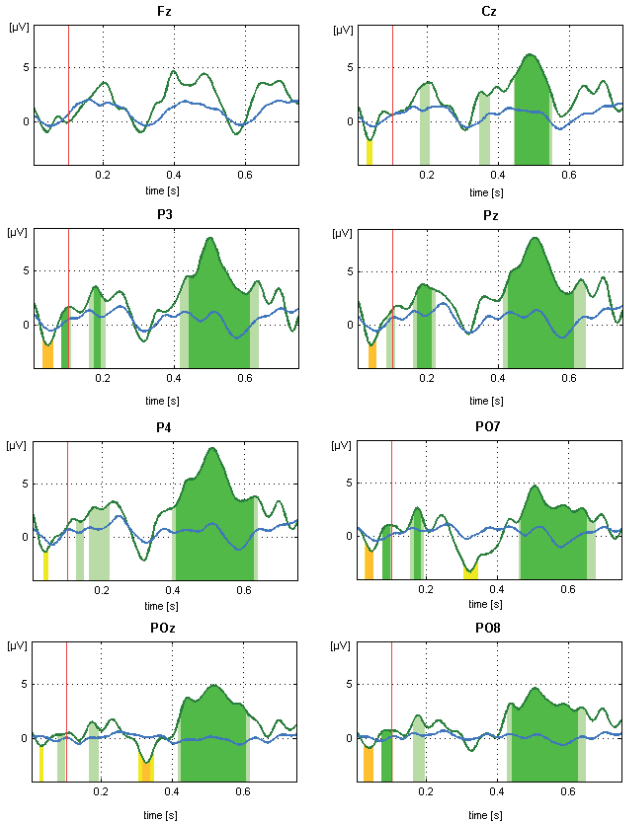


Fig. 6. The TARGET versus NON target averaged evoked potentials achieved while performing the calibration run for subject 9.

## IV. Conclusion

We tested the effectiveness of controlling a hand orthosis via a P-300 based Brain-Computer Interface system on nine healthy subjects. In comparison with other types of BCI systems used in stroke rehabilitation (like motor imagery based BCI [17]), the P300 BCI brings some advantages like: it uses a reduced number of electrodes [16] (in [17] the users used 64 electrodes), fact that leads to a faster setup of the system on a patient; the calibration phase lasts less; most of the users can achieve 100% control accuracy in less than 10 minutes. All our subjects successfully controlled the orthosis in performing grasping, moving and releasing objects.

## Acknowledgement

This work is supported by the Romanian National Authority for Scientific Research (UEFISCDI), Project 1/2014 Virtual Therapist with Augmented Feedback for Neuromotor Recovery (TRAVEE).

## References

[1] World Heart Federation, Stroke, http://www.world-heart-federation.org/cardiovascular-health/stroke/, last visit october 2015.

[2] A. G. Thrift, D. A. Cadilhac, T. Thayabaranathan, G. Howard, V. J. Howard, P. M. Rothwell, G. A. Donnan, "Global stroke statistics, International Jurnal of Stroke", *Official journal of the world stroke organization*, vol. 9, January 2014.

[3] The internet stroke centre, http://www.strokecenter.org/patients/about-stroke/stroke-statistics/ last visit october 2015.

[4] A. Voinea, A. Moldoveanu, F. Moldoveanu, O. Ferche, "Ict supported learning for neuromotor rehabilitation- achievements, issues and trends", *eLearning & Software for Education*, 2015, Issue 1, pp594-601. 8p.

[5] B. French, L. Thomas, M. Leathley, C. Sutton, J. McAdam, A. Forster, P. Langhorne, "Repetitive task training for improving functional ability after stroke", *Cochrane Database of Systematic Review*, vol.40, no.4, pp. 98-99, ISSN 00392499, 2009.

[6] G. Yavuzer, R. Selles, N. Sezer, S. Sutbeyaz, J.B. Bussmann, F. Koseoglu, M.B. Atay, H.J. Stam, "Mirror therapy improves function in subacute stroke: a randomized controlled trial", *Arch Phys Med Rehabil* 2008, 89:393-8.

[7] Garry M.I., Loftus A., Summers J.J., Mirror, Mirror on the wall viewing a mirror reflection of unilateral hand movements facilitates Ipsilateral M1 excitability, Exp Brain Res 2005; 163:118-112.

[8] Muzaffar Tufail, Wadhwa R.K., Borah Diganta, Laisram Nonica, Kothari S.Y., Evaluation of Mirror Therapy for Upper Limb Rehabilitation in Stroke, International Rehabilitation Forum Interscience Summit IRF2014, Suzhou International Expo Center, 16-10 oct. 2014, China.

[9] A. Voinea, A. Moldoveanu, F. Moldoveanu, "3D Visualization in IT Systems Used for Post Stroke Recovery: Rehabilitation Based on Virtual Reality", *20th International Conference on Control Systems and Computer Science (CSCS)*, 27-29 May 2015, Bucharest, Romania, pp.856 - 862, Print ISBN: 978-1-4799-1779-2

[10] M. King and J. Kimberlee, "Augumented Reality Assisted Upper Limb Rehabilitation Following Stroke", *Augmented Reality – Some Emerging Application Areas*, 2011, ISBN 978-953-307-422-1.

[11] C. E. Skilbeck, D. T. Wade, R. H. Langton, V. A. Wood, "Recovery after stroke", Journal of Neurology, Neurosurgery and Psychiatry, 1983, vol. 46.

[12] A. Espinosa, R. Ortner, D. Irimia, C. Guger, g-Tec, "Brain Computer Interfaces as Stroke Rehabilitation Tools: Optimization of current strategies", http://www.iaria.org/conferences2013/filesCOGNITIVE13/_2013_06_cognitive_CSP_ppt_Arnau.pdf, last visit october 2015.

[13] S. Caraiman, A. Stan, N. Botezatu, P. Herghelegiu, R.G. Lupu, A. Moldoveanu, "Architectural Design of a Real-Time Augmented Feedback System for Neuromotor Rehabilitation", *20th International Conference on Control Systems and Computer Science (CSCS)*, 2015, Bucharest, Romania, pp. 850 - 855, Print ISBN: 978-1-4799-1779-2

[14] Al. Zimmermann-Schlatter, C. Schuster, M.A. Puhan, E. Siekierka, J. Steurer, "Efficacy of motor imagery in post-stroke rehabilitation: a systematic review", *Journal of Neuroengineering and Rehabilitation*. 2008 Mar 14;5:8. doi: 10.1186/1743-0003-5-8.

[15] H.S. Anupama, Cauvery N.K., G.M. Lingaraju, "Brain computer interfaceand its types - a study", *International Journal of Advances in Engineering & Technology*, May 2012, Vol. 3, Issue 2, pp. 739-745

[16] C. Guger, S. Daban, E. Sellers, C. Holzner, G. Krausz, R. Carabalona, et al., „How many people are able to control a P300-based brain–computer interface (BCI)?", *Neuroscience Letters*, vol 462(1), pp. 94-98, 2009.

[17] D.C. Irimia, M.S. Poboroniuc, R. Ortner, "Improved method to perform FES&BCI based rehabilitation", *The 4th International Conference on E-Health and Bioengineering – EHB 2013*, pp. 1-4, November 2013.

[18] B. Blankertz, R. Tomioka , S. Lemm , M. Kawanabe, K.R. Müller, "Optimizing spatial filters for robust EEG". *IEEE Signal Processing Magazine*, pp. 51-56, January 2008.

[19] A. Stan, N. Botezatu, "Introducing aceMote: An energy efficient 32 bit mote", *International Conference on Development and Application Systems (DAS)*, pp. 79-84, Suceava, Romania, 2014.